| REV | DESCRIPTION | DATE | APPROVED |
|---|---|---|---|
| A | 新板发行 | 2020.03.08 | HHM |

ROHS Compliant REACH

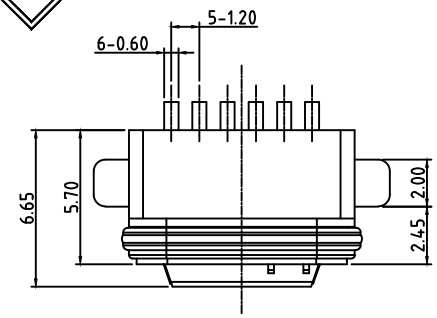


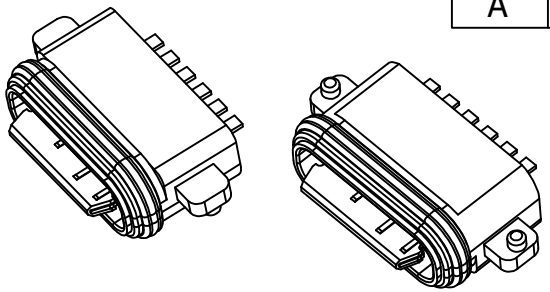

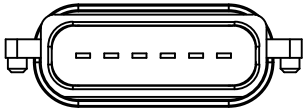

SPECIFICATIONS:
1. ELECTRICAL CHARACTERISTICS:
   1.1. RATING: 3A;
   1.2. CONTACT RESISTANCE: 30 mΩ MAX.(INITIAL);
   1.3. DIELECTRIC WITHSTANDING: 100V AC MIN.;
   1.4. INSULATION RESISTANCE: 100MΩ MIN.;
2. DURABILITY: 5,000 CYCLES MIN.;
3. INSERTION FORCE: 5-20N;
4. EXTRACTION FORCE: 6-20N;
5. WATER PROOFNESS:THIS PRODUCT IS BASED ON IPX7.
6. PLUG INTERFACE DIMENSIONS COMFORM TO USB2.0 SPEC.
7. PACKAGING: TAPE & REEL.

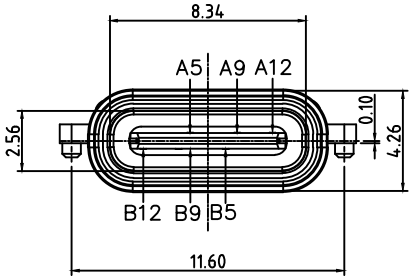


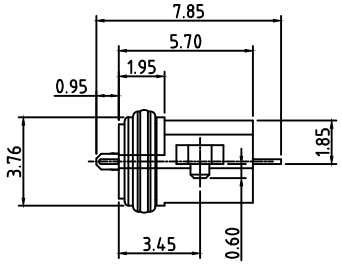


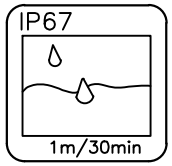


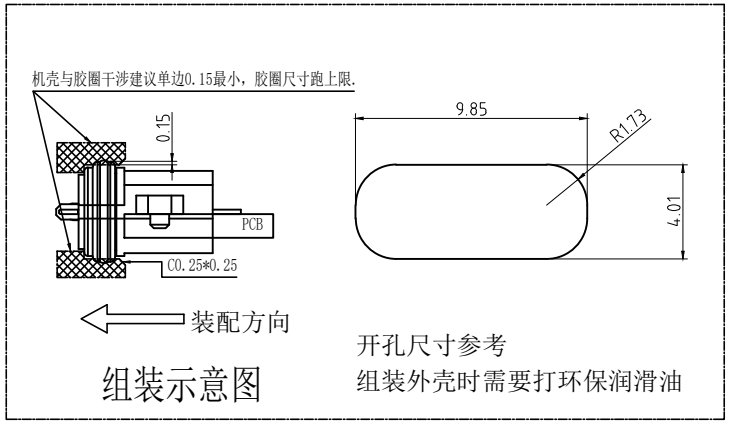


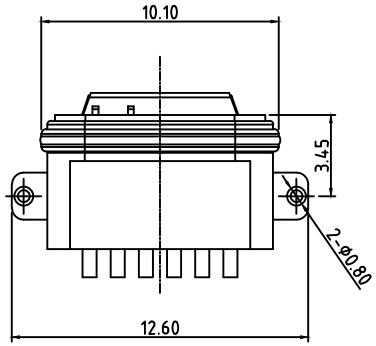


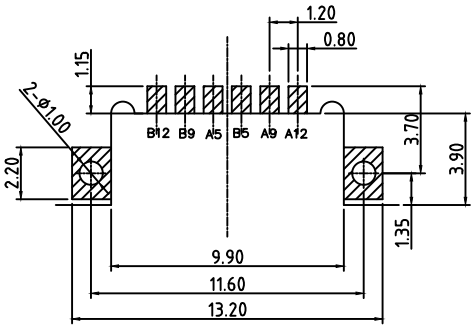


RECOMMENDED P.C.B LAYOUT
TOP VIEW (TOLRANCE:±0.05)

| ITEM | PART NAME | Q'TY | FINISH | NOTE |
|---|---|---|---|---|
| 3 | Shell | 1 | Ni Plating | |
| 2 | Contact | 6 | Phosphor bronze Au/Ni Plating T=0.20mm | |
| 1 | Housing | 1 | PA10T (G.F30%) | |

| PIN | SIGNAL NAME | PIN | SIGNAL NAME |
|---|---|---|---|
| A5 | CC1 | B12 | GND |
| A9 | VBUS | B9 | VBUS |
| A12 | GND | B5 | CC2 |

CUSTOMER DRAWING

| UNITS | SCALE | SHEET |
|---|---|---|
| mm | 1:1 | 1 OF 1 |

PROJECTION:

DRAW: DAP

GENERAL TOLERANCE
0. ±0.50
0.0 ±0.30
0.00 ±0.10
0.° ±2°
0.0° ±1°

CHECK: HWT

APPD: HHM

铭创科技（东莞）有限公司
Mingchuang Technology (Dongguan) Co., Ltd.

TITLE
防水TYPE C母座6PIN 沉板2.0 两脚插板SMT L=5.7
舌片外露 锌合金

MAT'L: SEE TABLE
FINISH: SEE TABLE
DWG.NO. B09W0605A
PART NO.
SIZE A4